DO NOT SCALE IF IN DOUBT ASK!

DRAWING NUMBER **F930800_M** | **CONTRACT**

FORMING CRACKS NOT ALLOWABLE.
REMOVE ALL BURRS AND SHARP EDGES.

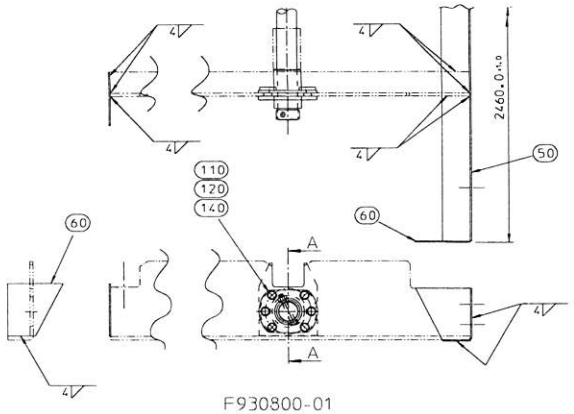

F930800-01

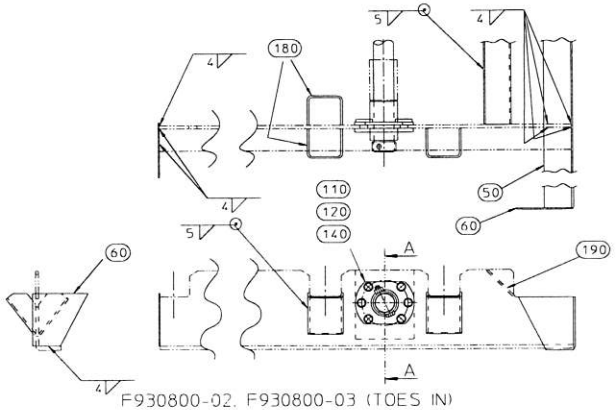

F930800-02, F930800-03 (TOES IN)
F930800-08 (TOES OUT, SHOWN)

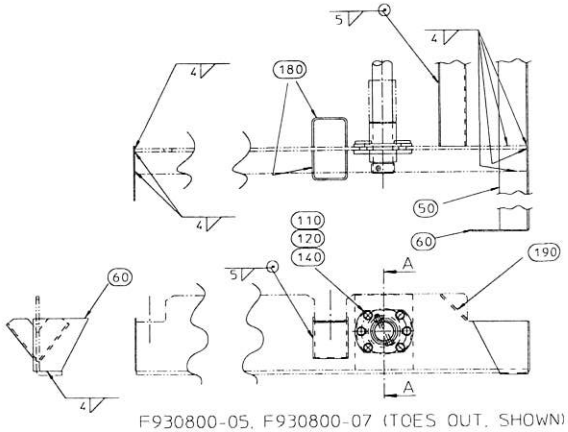

F930800-05, F930800-07 (TOES OUT, SHOWN)
F930800-10 (TOES IN)

OTHER VARIANTS

F930800-04
CALLS UP PARTS FOR FITTING
PIVOT PIN ONLY.

F930800-06
CALLS UP
SUPPORT PLATES ONLY

ASSEMBLY NOTES

ASSEMBLE SHAFT WITH PIVOT BRACKETS THROUGH SUBFRAME RAILS.

POSITION BODY ON CHASSIS & ALIGN.

SPOT THROUGH PIVOT BRACKETS & DRILL Ø16.10 HOLES FOR M16 FIXING BOLTS.

NOTE A CLOSE FIT BETWEEN BOLTS & BOLT HOLES IS ESSENTIAL.

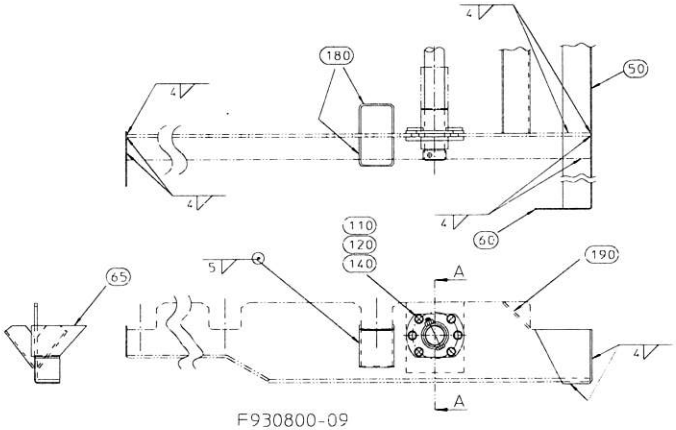

F930800-09

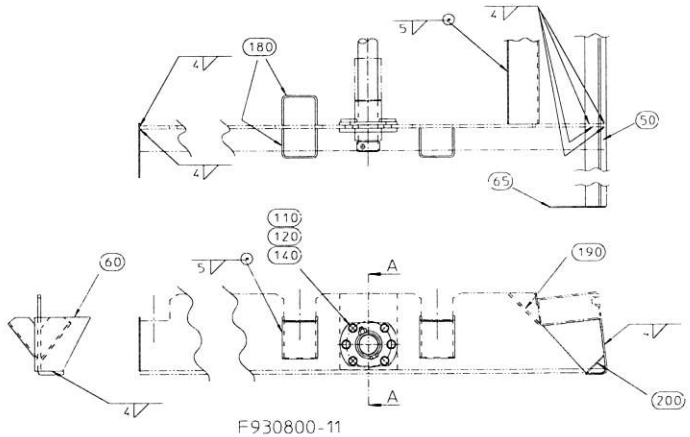

F930800-11

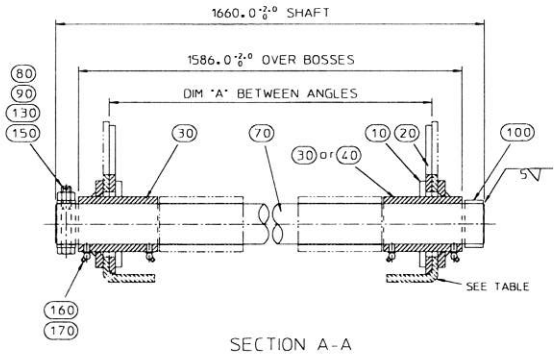

SECTION A-A

VARIANT	TOES	"A"
F930800-01	IN	1486
F930800-02	IN	1486
F930800-03	IN	1486
F930800-04	N/A	N/A
F930800-05	OUT	1392
F930800-06	N/A	N/A
F930800-07	OUT	1392
F930800-08	OUT	1392
F930800-09	OUT	1392
F930800-10	IN	1486
F930800-11	OUT	1392

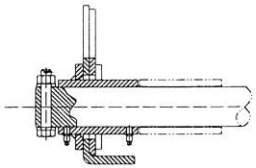

TIGHTEN BOLTS PROGRESSIVELY AROUND BOSS UNTIL A TORQUE OF 234Nm (24kgf.m or 174lbf.ft) IS ACHIEVED.

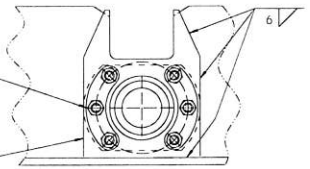

NO GAP ALLOWABLE BETWEEN PLATE & RAIL

DETAIL OF PIVOT MOUNTING

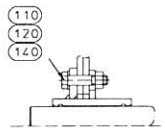

SECTION THROUGH MOUNTING BOLT

PROJECTION / PROJECTION / PROJEKTION	WELD SYMBOLS / SYMBOLES DE SOUDURE / SCHWEISSUNGS ZEICHEN	GENERAL TOLERANCES unless stated. Linear Dimensions to be specified by number of decimal places. Decimal Places: 0 ±2 mm; 0.0 ±1 mm; 0.00 ±0.5 mm; Angular Dimensions ±1°	ALTERNATIVE MATERIALS: THK, SPEC	FRUEHAUF	DRWN JW DATE 29/10/99; CHKD JW DATE 29/10/99; APPD CJB DATE 3/02/00	DRAWING TITLE: SUBFRAME COMMON PARTS	SCALE 1:8; SIZE A1
				MATERIAL; MATERIAL THK; EST. WEIGHT (KG)		DRAWING NUMBER: F930800_M	ISSUE A

ALL DIMENSIONS IN mm

© THIS DRAWING OR INFORMATION CONTAINED MUST NOT BE REPRODUCED WITHOUT WRITTEN PERMISSION FROM FRUEHAUF.

TEMPORARY PLOT - DESTROY AFTER USE. Sent by ... coryy